Power Supply
Technical Specification

Model: Model: HKI350-480PB

Part Number: P08-350480003R

FILE NO. EQS-731-5855

Prepared by: ShaoZhicheng

Checked by: WangGuixu

Approved by: Wang Benqiang

Date: 2020-07-13

Item	Spec. REV	Revise date	Revise description	Reason
1	V01	2020.7.13	Original Spec.	Original Spec
2			Overshoot:change from 1% to 3%	
3			Hold time:change from “>20mS” to “>10mS”	
4			Add safety symbol CE、3C、UL on label	
5				
6				
7				
8				

目录 TABLE OF CONTENTS

1. 输入性能 INPUT CHARACTER ----------5
1.1 标称输入电压范围 Nameplate Input Voltage Range ----------5
1.2 输入工作电压范围 Input Voltage Range ----------5
1.3 最高极限输入电压 High-Point Input Voltage Range ----------5
1.4 交流输入频率 Input Frequency Range ----------5
1.5 输入电流 Input Current ----------5
1.6 输入冲击电流 Inrush Current ----------5
1.7 功率因数 Power Factor ----------5
1.8 谐波电流 Harmonic Current ----------5
2. 输出性能 OUTPUT CHARACTER ----------6
2.1 输出电压范围 Output voltage range ----------6
2.2 额定电流 Output Rated Current ----------6
2.3 电压调整率 Voltage Regulation ----------6
2.4 负载调整率 Load Regulation ----------6
2.5 输出纹波与杂讯 Ripple / Noise ----------6
2.6 容性负载能力 Capacitive load ----------6
2.7 整机效率 Power Efficiency ----------6
2.8 开机输出延时 Output Delay Time ----------6
2.9 输出电压上升时间 Output Voltage Rise Time ----------6
2.10 开关机过冲 ON/Off Overshoot ----------6
2.11 保持时间 Hold-Up Time ----------6
2.12 动态响应恢复时间 Dynamic Response Recovery Time ----------6
2.13 动态响应过冲 Dynamic Response Overshoot ----------7
2.14 噪音 Noise ----------7
2.15 待机功耗 Standby Consumption ----------7
2.16 低温启机 Low Temperature AC ON ----------7
3. 保护功能 PROTECTION ----------8
3.1 输出过流保护 Output Over Current Protection ----------8
3.2 短路保护 Short Circuit Protection ----------8
3.3 过压保护 Over Voltage Protection ----------8
3.4 输入欠压保护 Input Under Voltage Protection ----------8
3.5 过温保护 Over Temperature Protection ----------8
4. 安规要求 SAFETY REQUIREMENTS ----------8
5. 电磁兼容性 EMC ----------9
6. 环境适应性 ENVIRONMENT ADAPTABILITY ----------11
6.1 环境条件 Environment Condition ----------11
6.2 可靠性要求 Life Test ----------11
6.3 老化要求 Aging Requirements ----------11
6.4 震动 Vibration ----------11
6.5 冲击 Shock ----------11
7. 电源结构规格 POWRE MECHANICAL SPECFICATION ----------12

7.1 电源板的大小 Power Board Size ----------12
8.包装/PACAGING---------- 13
8.1 包装图 Packaging Size ----------13
8.2 产品标签图 Label Drawing ----------14
9. 样机图片 **SAMPLE FIGURES** ----------14

PRO PM 350W Series Functional Specification

1.输入性能 INPUT CHARACTER:

项目 Item		最小值 Min	典型值 Normal	最大值 Max	单位 Units	测试条件 Conditions
1.1	标称输入电压范围 Nameplate Input Voltage Range	100	230	240	VAC	在此电压范围内进行安规认证 For safety certify
		120		310	VDC	
1.2	输入工作电压范围 Input Voltage Range	90	230	264	VAC/	正常工作 Normal operation
		102		370	VDC	
1.3	最高极限输入电压 High-Point Input Voltage Range	-	-	280	VAC	在此输入条件下可以不工作，但不能损坏 Maybe not operation, must no any damage
1.4	交流输入频率 Input Frequency Range	47	50/60	63	Hz	正常工作 Normal operation
1.5	输入电流 Input Current	-	-	4.8	A	264Vac/90Vac 输入/满载 264Vac/90Vac input/full load
		-	-	4.5	A	370Vdc/102dc 输入/满载 370Vdc/102Vdc input/full load
1.6	输入冲击电流 Inrush Current	-	<60A	-	A	230V 输入冷起机 At 25℃ cold start Input 230Vac Note（1）
1.7	功率因数 Power Factor	＞0.9			N/A	全范围输入/满载 Full range input / Full load
1.8	谐波电流 Harmonic Current:	-	class A	-	N/A	Note（2）

Note(1) 电源的浪涌电流应该不超过标准元件的规格值（包括整流桥，保险丝及浪涌限制元件）。

Power supply inrush current shall be less than the ratings of its critical components (including rectifier bridge, fuses, and surge limiting devices) under all conditions of line voltage of Sections .

Note(2) 电源的 L 与 N 线上谐波电流应该满足 IEC61000-3-2 标准 A 类设备要求。输入功率大于 75W 样品需要在 230V/50Hz 条件下测试。

The harmonic of the power line and neutral current shall comply the standard IEC61000-3-2 for class A equipment. The Measurement shall be performed at 75W input power and full output load, Input voltage shall be 230Vac/50Hz.

2. 输出性能 OUTPUT CHARACTER

项目 Item		最小值 Min	典型值 Normal	最大植 Max	单位 Units	测试条件 Conditions
2.1	输出电压范围 Output voltage range	43.2	48V	52.8	Vdc	全范围输入/空载~满载，测试点—输出端口 Full range input/No load~Full load, Test point--output terminal **Note(3)**
2.2	输出额定电流 48V Output Rated Current	-	7.3	-	A	标称范围输入/满载 Nominal Range Input / Full load load
2.3	电压调整率 Voltage Regulation	-	≤±1	-	%	全范围输入/满载 Full range input / Full load
2.4	负载调整率 Load Regulation	-	≤±1	-	%	全范围输入/满载 Full range input / Full load
2.5	输出纹波/杂讯 Ripple / Noise Note（4）	≤150 for 48V			mV	输入 115/230Vac 满载 Input 115/230Vac /Full load
		-	≤300	-		其他条件（低温-30 度~-10 度） Other condition(-30℃~-10℃)
2.6	容性负载能力 Capacitive load	-	>2000uF/A FOR 48V	-	uF	标称范围输入/满载/铝电解电容 Nominal Range Input / Full load/ Aluminum electrolytic Capacitor r
2.7	整机效率 Power Efficiency	＞86			%	输入 230Vac、满载、常温下 Input 230Vac / Full load/25℃
2.8	开机输出延时 Output Delay Time	-	≤2	-	S	全范围输入/满载 Full range input / Full load
2.9	输出电压上升时间 Output Voltage Rise Time	-	≤100	-	mS	输入 90-264Vac/满载 Input 90-264Vac / Full load
2.10	开关机过冲 ON/Off Overshoot	-	<±3	-	%	输入 90-264VAC、满载 Input 90-264VacVac / Full load
2.11	保持时间 Hold-Up Time	-	≥10	-	mS	输入 230VAC、满载 Input 230Vac / Full load
2.12	动态响应恢复时间 Dynamic Response Recovery Time		<1		mS	负载变化，电流变化率 1A/us，，周期 1mS 和 10mS 10%~50%~90%~50%~10% Full load, Current change rate 1A/us, Period 1mS and 10ms
2.13	动态响应过冲	-	<±5	-	%	全范围输入/满载

	Dynamic Response Overshoot					Full range input / Full load
2.14	噪音 Noise	-	< 60		dB	所有条件下包括过载和短路，距离 0.5m Under all conditions including overload and short circuits distance=0.5m
2.15	待机功耗 Standby Consumption	-	≤1	-	W	输入 230VAC 时，电源功耗不超 1W AC input power should not exceed 1W under no load and 230Vac voltage.
2.16	低温启机 Low Temperature AC ON	-	-	-		-30° C，100Vac 满载一次性启机 -20° C 90Vac 在满载一次性启机 Input 100Vac / Full load/-30℃；start up once time Input 90Vac / Full load/-20℃；start up once time

Note(3) 50 度条件下连续工作不超过 P0=u*i，70 度条件下连续工作不超过 60%*P0，50 度条件下每增加一度，减额 2%的额定负载。

1，at50℃ The continuous output power shall not exceed 350W

2，at 70℃ The continuous output power shall not exceed 210W

3，The output power shall derating 2% per degrade at ambitious higher than 50℃.

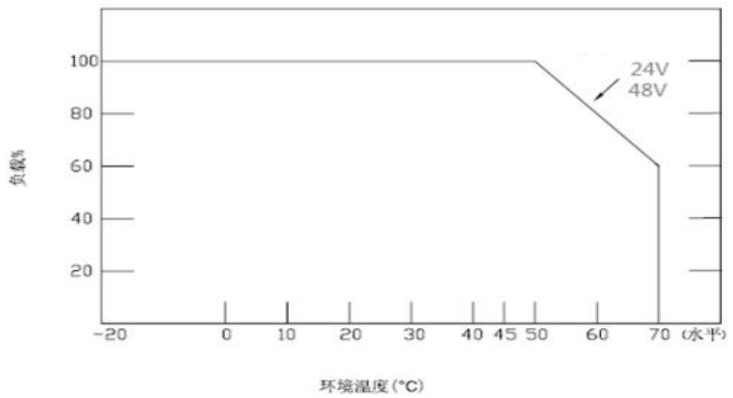

Note(4) 纹波和噪声测试方法：使用一条 12cm 双绞线，同时终端要并联 0.1uF 陶瓷电容和 10uF 电解电容，在 20MHZ 带宽下进行量测,在 90～264VAC，温度-30℃～+70℃条件下测量。（纹波在不同负载下的一致性及稳定性，具体参照航嘉工业电源测试标准）

Ripple & Noise testing method: A 0.1uF CERAMIC capacitors and 10uF electrolytic capacitors should be put across output terminals during ripple & noise test. The oscilloscope bandwidth is set at 20 MHz and a 12cm twisted-pair will be used to measure it, between 90VAC to 264VAC, and Between negative 20℃ and positive 70℃ temperature. （The Ripple on different condition should be in the limits referencing to Industrial power test specification ）

3. 保护功能 PROTECTION

3.1 输出过流保护 Output Over Current Protection

当输出电流达到 120%～180% of 额定电流，电源将进入打嗝保护状态,当故障排除后，电源会自动恢复工工作。

When the output current achieve 120% ~ 180% of rated output current, power will enter hiccup protection status, and it will recover when the breakdown's removed.

3.2 短路保护 Short Circuit Protection

当输出端短路时电源不能被损坏、不能起火燃烧，短路消除后能自动恢复。

When output is short, the power supply don't be damaged,don't burst into flames and it will recover when such condition's removed.

3.3 过压保护 Over Voltage Protection

测试项 Sense Level	过压值 Over Voltage	保护模式 Protection Mode
+48V	55-62V	锁死保护 Latch off

48V :电源在输出过压保护后，输出会锁死保护，需输入下电，再次上电才能恢复输出电压。

48V :Output voltage will be latch off ,it should re-power the input voltage to recovery the output.

3.4 输入欠压保护 Input Under Voltage Protection

交流输入欠压保护点：<75Vac

The power supply should protect itself when the input brown out Occur(<75Vac）

3.5 过温保护 Over Temperature Protection

电源支持过温保护，自恢复，过温保护点确保所有器件温度规格不超标。

The power supply should protect itself when OTP occur, and it will recover when the breakdown's removed. The OTP points ensure all device temperature specifications.

4. 安规要求 SAFETY REQUIREMENTS AND CERTIFY

该系列电源设计符合下列安全规格：

1 满足 IEC/EN62368-1, UL62368-1， GB4943 标准要求.有 IEC/EN62368-1, GB4943,UL62368-1 认证证书，且产品标有 CCC,CE,cURus 标识。

(1)Safety standardization ;IEC/EN62368-1, GB4943 , UL62368-1.

(2)The power supply has been certified by IEC/EN62368-1, CCC GB4943,UL62368-1 .

(3)The CCC ,CE ,cURus Safety mark shall appear on the product.

项目 Item	等级 Grade	标准 Standard(或测试条件 Test Conditions)
输入对输出 Input to output	3000Vac/50Hz	持续 1 分钟,无击穿,无飞弧现象,漏电流<10mA。（测试时断开放电

		管） One minute,no breakdown,no flight arc,Leak current<10mA.(open the discharge tube during tests)
输入对地 Input to earth	2000Vac/50Hz	持续 1 分钟，无击穿，无飞弧现象，漏电流<10mA。（测试时断开放电管） One minute,no breakdown,no flight arc,Leak current<10mA.(open the discharge tube during tests)
输出对地 Output to earth	500Vac/50Hz	持续 1 分钟，无击穿，无飞弧现象，漏电流<10mA。（测试时断开放电管） One minute,no breakdown,no flight arc,Leak current<10mA.(open the discharge tube during tests)
绝缘电阻 Insulating resistance	10MΩ	常温常压下，相对湿度为 90%，试验电压为直流 500V 时，整流器主电路的交流部分和直流部分对地，以及交流部分对直流部分的绝缘电阻均不低于 10MΩ．（测试时断开放电管） Measure voltage 500VDC(open the discharge tube during tests)
漏电流 Leak current	≦3.5mA	输入 264VAC/60Hz Input 264Va/60Hz

2：结构安全标准符合 EN62368，CCC GB4943 ；Mechanical Safety refer to EN62368，CCC GB4943；
3：IP 防护等级 IPX0；Degrees of protection provided by closure IPX0；
4：工作海拔要求 5000m；Operating to 5000 meters；
5：满足 IEC/UL62368-1 输出 SELV 要求；（CB IEC/EN62368-1 报告中体现 SELV 测试数据）
6: 工作环境污染等级定义；Pollution II；

5. 电磁兼容性 EMC

项目 Item	指标要求 Index requirements	标准 Standard
传导干扰(CE)	with and without connection between output „-„ and Earthing	EN55032 Class B Note（7）
辐射干扰(RE)	with and without connection between output „-„ and Earthing	EN55032 Class B Note（7）
静电抗扰(ESD)	空气放电 Air±8KV Level3	IEC61000-4-2 Category B
	接触放电 Indirect Contact±6KV Level 3	IEC61000-4-2 Category B
快速瞬间变脉冲群(EFT/B)	4KV(Level 4) / 2KV (level 3)(power line)	IEC61000-4-4 Category B
浪涌（SURGE)	交流输入端口时，线对线 L-N±2kV，放电电阻 2Ω、线对地 L&N-P±4kV，8/20(1.2/50)us 波	IEC61000-4-5 Category B
CS	0.1...80MHz (1KHz AM 80%) 10V Level 3-Asymmetrical,	IEC61000-4-6 Category A
RS	80...3000MHz (1KHz AM 80%)	EN 61000-4-6 criteria A

	10V/m Level 3 criteria A	
Magnetic Field Immunity	50Hz and 60Hz: 10A/m : criteria A 30A/m : criteria B	IEC61000-4-8
电压跌落和短时中断（DIP）	0% during 0,5 and 1 period 40% during 10/12 fluctuations 70% during 25/30 fluctuations 80% during 250/300 fluctuations	EN 61000-4-11 criteria B
谐波电流	满足 Class A 类产品的限制要求	IEC6100-3-2
电压波动和闪烁	0% during 250/300 fluctuation	IEC6100-3-3 criteria B

性能判据 A（连续现象）

在干扰过程中，直流输出范围应与 在正常服务条件一致：DC 输出电压的波动应在±10%内；

干扰过程中或结束后，被测设备运行时不应有告警，错误告警指示（电源故障、保护故障等）和错误显示。

性能判据 B（瞬变现象）

a）在试验过程中，直流输出端的电压不应超出最大值；

b）在干扰过程中出现的波峰群应忽视；

c）干扰结束后，被测设备运行时不应有告警，错误告警指示（电源故障、保护故障等）和错误显示；

d）在干扰结束后，应自动恢复到正常性能。

性能判据 C（中断）

功能的暂时丧失是允许的，所规定的功能是可自动恢复的或能被操作者恢复，或被正常的后来的运行恢复。

性能判据 D（抵抗性）

设备应承受测试没有损坏或其它干扰（如软件损坏或故障保护设备的误操作），而且在瞬变电磁现象结束后适当地在规定界限内运行。（不必要求当测试进行时适当运行）。干扰可以造成保险丝或其它规定设备的动作，而不得不在正常运行恢复前替换或复位。

Performance Criteria Description :

A－－normal performance within limits specified by the manufacturer, requestor or purchaser.

B－－temporary loss of function or degradation of performance which ceases after the disturbance Ceases, and from which the equipment under test recovers its normal performance, without operator Intervention.

C－－temporary loss of function or degradation of performance, the correction of which requires Operator intervention.

D－－loss of function or degradation of performance which is not recoverable, owing to damage to Hardware or software, or loss of data.

Note（7） 电源视为系统内元件的一部份，所有的 EMI 测试需安装在航嘉指定安装支架上面测试，并包含输出 0V 接地及不接地两种方式。

Note(7) The power supply is considered as part of the system element .All of the EMI tests shall be under on 他和 Huntkey defined metal frame ， it should include 2 model : output 0V connect and non-connect to PE for test

6. 环境适应性 ENVIRONMENT ADAPTABILITY

6.1 环境条件 Environment Condition

项目 Item	最小值 Min	典型值 Normal	最大值 Max	单位 Units	备注 Note
工作温度 Operation Temperature	-30	25	70	℃	-30℃冷态可启机，配合系统满足正常工作要求。70℃为电源最高工作温度 Turn on at -30℃,the max operation ambient temperature is 70℃.
储存温度 Storage Temperature	-40	25	85	℃	--
工作湿度 Operation Humidity	5	--	95	%	无冷疑 no condensation
储存湿度 Storage Humidity	5	--	95	%	无冷疑 no condensation
大气压力 Atmospheric Pressure	86	--	106	KPa	
散热方式 Emitting Heat Mode	自然散热 natural radiating heat(电源自带风扇， with fan)				

6.2 电源寿命测试 Life Test

6.2.1 ECAP Life≧30000h

电源环境温度 40℃及额定输入与满载条件下，电容寿命至少 30000Hours。

The power life time shall be at least 30000Hours, when the ambient temperature is 40℃ at full load.

6.2.2 MTBF>150000h

电源环境温度 40℃及额定输入与满载条件下，按照 IEC 61709(SN 29500)标准，MTBF 大于 150000Hours

The MTBF shall be at least 150000Hours when the ambient temperature is 40℃ at full load.

>150000h acc. IEC 61709(SN29500) at 40 Degree

6.3 老化要求 Aging Requirement

电源老化时间参考电源企业内部产品老化时间升降流程作业。

老化条件：额定电压 230Vac 输入，80% 满载，45-/+5℃.

The Aging time refers to manufactory criterion.

Aging condition; 230Vac, 80% full load 45-/+5℃.

6.4 震动 Vibration

10～500HZ, 5G 10 分钟/周期，X、Y、Z 轴各 60 分钟。(单台机子)

Between 10HZ and 500HZ, 5G 10 minutes per cycle, 60 minutes at per X、Y、Z directions. (1 set)

6.5 冲击 Shock

加速度 30g, 每个方向各 6 次，X、Y、Z 轴，(单台机子)

Shock acceleration 30g, and 6 times per X、Y、Z direction. (1 set)

7. 电源结构规格 POWRE MECHANICAL SPECFICATION

7.1 电源板的大小 Power Board Size (unit :mm)

外壳尺寸 L*W=215+1/-0.5mm *115+1/-0.5mm ，H=30±0.5mm.

Ensure size L*W=215+1/-0.5mm *115+1/-0.5mm ，H=30±0.5mm.

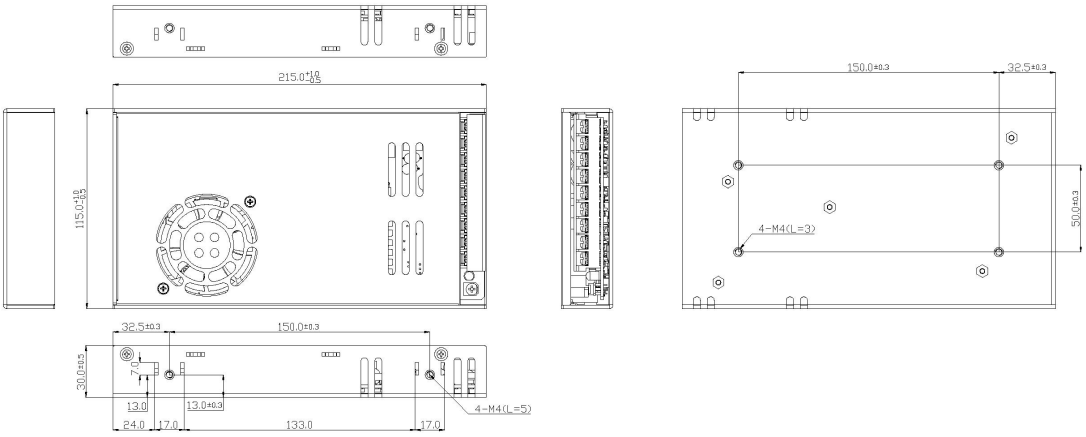

AC、DC 输入/输出端子

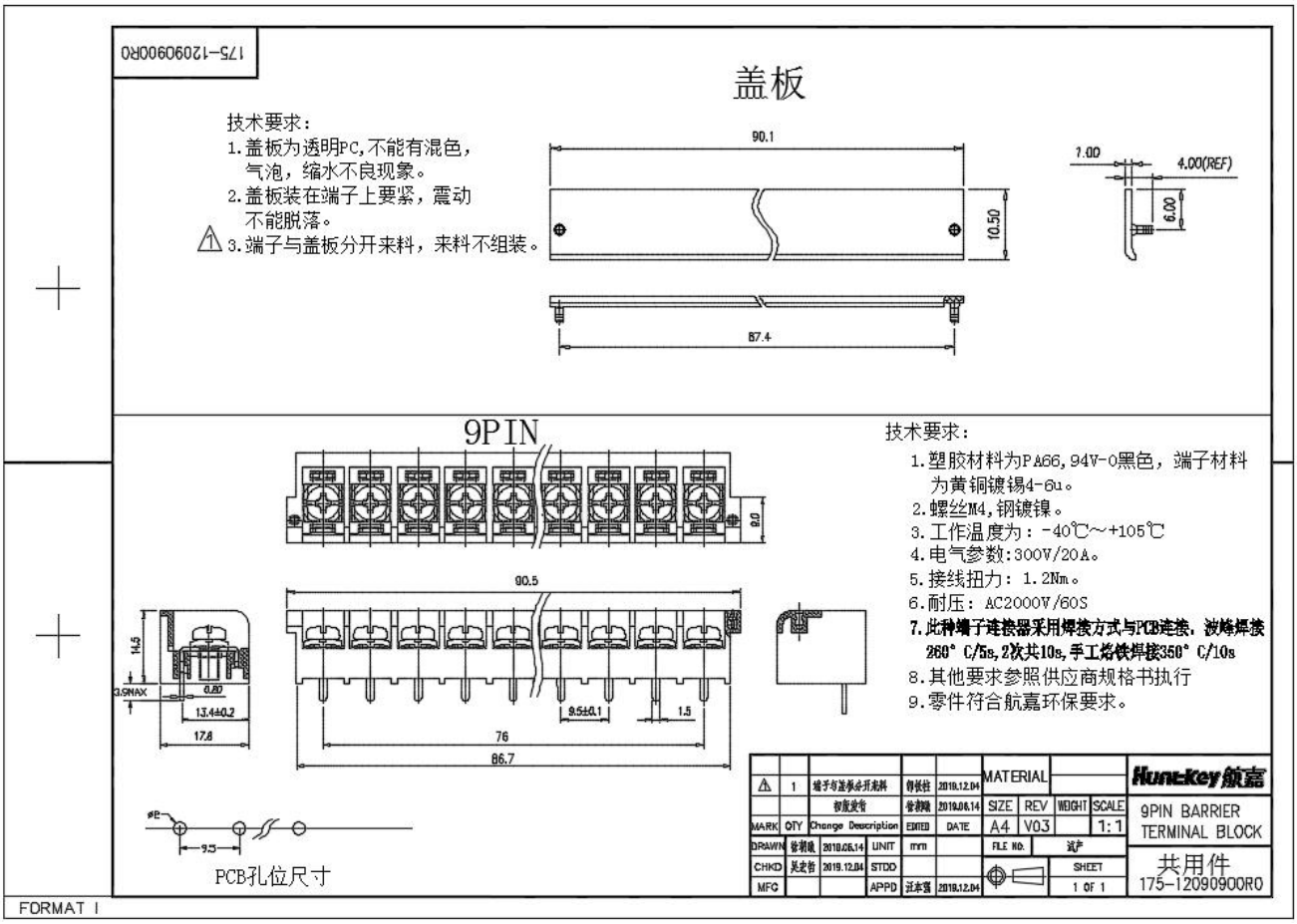

8. 包装/ PACKAGING

8.1 包装图 Packaging Size.

0.74Kg/1 set；20pcs/约 18Kg

单机用纸盒包装,然后放入瓦楞纸箱并用纸板隔离。

One set packed by a boxes Then take the unit into carton and isolated by chipboard by chipboard.

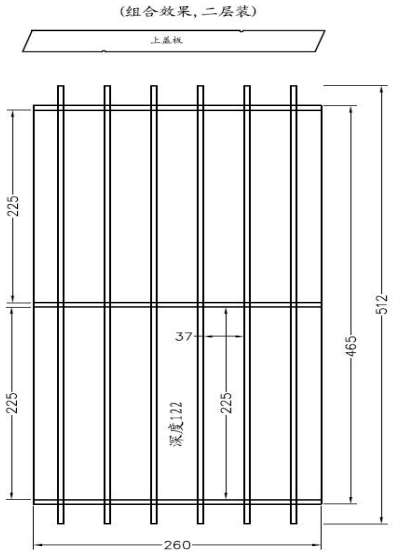

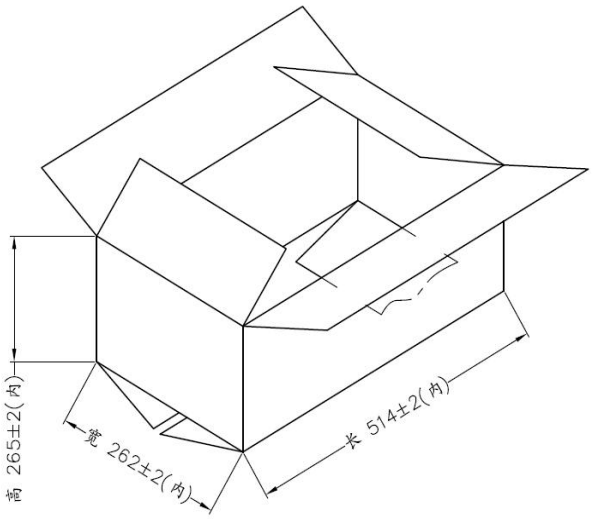

8.2 产品标签图 Label Drawing

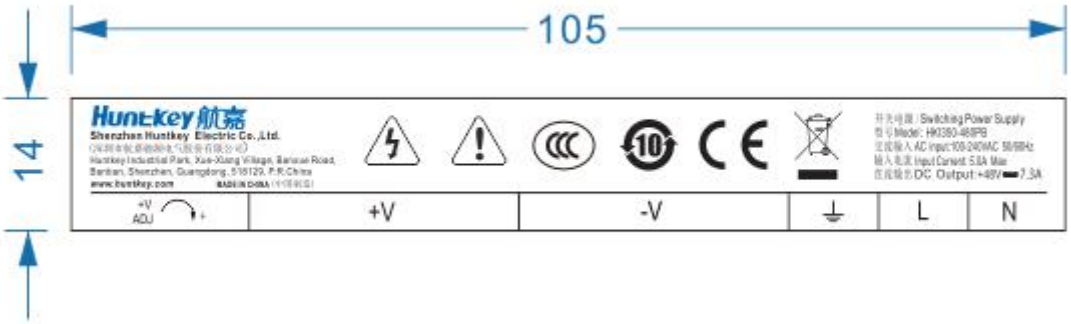

9. 样机图片 Sample Figures

Huntkey 航嘉
+V
-V
L
N

Huntkey Hong Kong Development Co.Ltd.		P/N：
		Version：01
Prepare by:	Check by:	Approved by:
ShaoZhicheng	WangGuixu	Wang Benqiang
Date:	2020-07-13	