Industrial Power

Technical Specification

Model: HKI500-240PB

Part Number:P08-500240000R
FILE NO. EQS-731-6568

Prepared by: Liu dengjun

Checked by: Wang Guixu

Approved by: Wang Benqiang

Date: 2023-06-28

REV.	Descriptions of change	Date of change	REF. DOC. No.	ECR No.
V01	Original	2022-10-29		
V02	Upgrade the derating curve	2022-11-25		
V03	Upgrade the Specification format and correct the E-CAP life from 5 years to 3 years,Dynamic Response Overshoot from ±10% to ±5%,Standby Consumption from 6W to 4W	2023-05-04		
V04	Upgrade the derating curve of the Input Voltage and upgrade the work condition,upgrade the lable for CQC Certification	2023-06-28		

目录 TABLE OF CONTENTS

1. 输入性能 INPUT CHARACTER ----------5
1.1 标称输入电压范围 Nameplate Input Voltage Range ----------5
1.2 输入工作电压范围 Input Voltage Range ----------5
1.3 最高极限输入电压 High-Point Input Voltage Range ----------5
1.4 交流输入频率 Input Frequency Range ----------5
1.5 输入电流 Input Current ----------5
1.6 输入冲击电流 Inrush Current ---------- 5
1.7 功率因数 Power Factor ----------5
1.8 谐波电流 Harmonic Current ----------5
2. 输出性能 OUTPUT CHARACTER ---------- 6
2.1 输出电压范围 Output voltage range----------6
2.2 额定电流 Output Rated Current ----------6
2.3 电压调整率 Voltage Regulation ----------6
2.4 负载调整率 Load Regulation ----------6
2.5 输出纹波与杂讯 Ripple / Noise ----------6
2.6 容性负载能力 Capacitive load ----------6
2.7 整机效率 Power Efficiency ----------6
2.8 开机输出延时 Output Delay Time ----------6
2.9 输出电压上升时间 Output Voltage Rise Time ----------6
2.10 开关机过冲 ON/Off Overshoot ----------6
2.11 保持时间 Hold-Up Time ----------6
2.12 动态响应恢复时间 Dynamic Response Recovery Time ----------7
2.13 动态响应过冲 Dynamic Response Overshoot ----------7
2.14 低温启机 Low Temperature AC ON----------7
2.15 待机功耗 Standby Consumption ----------7
3. 保护功能 PROTECTION ----------8
3.1 输出过流保护 Output Over Current Protection ----------8
3.2 短路保护 Short Circuit Protection----------8
3.3 过压保护 Over Voltage Protection ----------8
3.4 输入欠压保护 Input Under Voltage Protection ----------8
3.5 过温保护 Over Temperature Protection ----------8
4. 安规要求 SAFETY REQUIREMENTS ----------8
5. 电磁兼容性 EMC ----------9
6. 环境适应性 ENVIRONMENT ADAPTABILITY ----------10
6.1 环境条件 Environment Condition ----------10
6.2 可靠性要求 Life Test ---------- 12
6.3 老化要求 Aging Requirements ----------12
6.4 震动 Vibration----------12
6.5 冲击 Shock----------12
7. 电源结构规格 POWRE MECHANICAL SPECFICATION ----------12
7.1 电源外观尺寸 Mechanical outline----------12
7.2 安装尺寸 Mounting Size----------13

7.3 AC、DC 输入/输出端子----------14
8. 包装 PACAGING---------- 14
8.1 包装图 Packaging Size ----------14
8.2 产品标签图 Label Drawing ----------15
8.3 运输 Transports----------15
9. 样机图片 SAMPLE FIGURES ----------15

Functional Specification

1.输入性能 INPUT CHARACTER:

项目 Item		最小值 Min	典型值 Normal	最大值 Max	单位 Units	测试条件 Conditions
1.1	标称输入电压范围 Nameplate Input Voltage Range	200	220	240	VAC	额定输入电压范围 Rated input voltage range
		-		-	VDC	
1.2	输入电压范围 Input Voltage Range	180		264	VAC	正常工作 Normal operation
		-		-	VDC	
1.3	最高极限输入电压 High-Point Input Voltage Range	-	-	300	VAC	在此输入条件下可以持续 5S 满载 Can last for 5 seconds under this input condition full load
1.4	输入频率范围 Input Frequency Range	47	50/60	63	Hz	正常工作 Normal operation
1.5	输入电流 Input Current	-	-	5	A	180Vac 输入/满载 180Vac input/full load
		-	-	-	A	dc 输入/满载 Vdc input/full load
1.6	输入冲击电流 Inrush Current	-	-	80	A	230Vac 输入冷起机 25℃ At 25℃ cold start Input 230Vac Note（1）
1.7	功率因数 Power Factor	＞0.9			N/A	230Vac 输入/满载 230Vac input / Full load
1.8	谐波电流 Harmonic Current:	-	class A	-	N/A	230Vac 输入/额定负载 230Vac Input /full load Note（2）

Note(1) 电源的浪涌电流应该不超过标准元件的规格值（包括整流桥，保险丝及浪涌限制元件）。
Power supply inrush current shall be less than the ratings of its critical components (including rectifier bridge, fuses, and surge limiting devices) under all conditions of line voltage of Sections .

Note(2) 电源的 L 与 N 线上谐波电流应该满足 IEC61000-3-2 标准 A 类设备要求。输入功率大于 75W 样品需要在 230V/50Hz 条件下测试。
The harmonic of the power line and neutral current shall comply the standard IEC61000-3-2 for class A equipment.
The Measurement shall be performed at 75W input power and full output load, Input voltage shall be 230Vac/50Hz

2. 输出性能 OUTPUT CHARACTER

项目 Item		最小值 Min	典型值 Normal	最大植 Max	单位 Units	测试条件 Conditions
2.1	输出电压范围 Output voltage range	23.5	24	28.8	Vdc	全范围输入/空载~满载，测试点—输出端口.电位器调压 Full range input/No load~Full load, Test point--output terminal **Note(3)** Using the Potentiometer.
2.2	输出电流范围 Output Current range	0	-	21	A	输出额定功率为 504W，客户使用时不允许超出额定功率，例如：24V/21A➔ 28.8V/17.5A Rated output power is 504W，Client use not exceeding rated power, E.g.24V/21A➔ 28.8V/17.5A
2.3	电压调整率 Voltage Regulation	-1	-	1	%	全范围输入/最小负载-满载 Full range input / Min load-Full load
2.4	负载调整率 Load Regulation	-2	-	2	%	全范围输入/最小负载-满载 Full range input / Min load-Full load
2.5	输出纹波/杂讯 Ripple / Noise **Note（4）**	-	-	120	mV	输入 230Vac 常温 25° C Input 230Vac@25℃
		-	-	500	mV	其他条件（低温-10℃） Other condition(-10℃)
2.6	容性负载能力 Capacitive load	10000	-	-	uF	标称范围输入/满载/铝电解电容/额定电压 Nominal Range Input / Full load/ Aluminum electrolytic Capacitor/Rate Voltage
2.7	整机效率 Power Efficiency	89%	90.5%	–		输入 230Vac、满载、常温下/额定电压 Input 230Vac / Full load/25℃/Rate Voltage
2.8	开机输出延时 Output Delay Time	-	-	2000	mS	全范围输入/最小负载-满载 Full range input / Min load-Full load
2.9	输出电压上升时间 Output Voltage Rise Time	-	-	100	mS	全范围输入/最小负载-满载 Full range input / Min load-Full load
2.10	开关机过冲 ON/Off Overshoot	-	-	5	%	全范围输入/最小负载-满载 Full range input / Min load-Full load
2.11	保持时间 Hold-Up Time	-	-	-	mS	输入 230Vac 满载/额定电压/输出电压从 100%跌落至 95%额定输出电压 Input 230Vac / Full load/Rate Voltage/ Vout: 100%-95% rated voltage
2.12	动态响应恢复时间	-	-	1	mS	负载变化，电流变化率 1A/us，

	Dynamic Response Recovery Time					，周期 1mS 和 10mS 10%~50%~90%~50%~10% Full load，Current change rate 1A/us, Period 1mS and 10ms
2.13	动态响应过冲 Dynamic Response Overshoot	-5	-	+5	%	
2.14	低温启机 Low Temperature AC ON	-	OK	-		-10℃,180Vac 满载一次性启机 Input 180Vac / Full load/-10℃；start up once time Full load;
2.15	待机功耗 Standby Consumption	-	-	4	W	230VAC，额定输出电压，空载 under no load ,rated output voltage and 230Vac input voltage.

Note(3) 1,在有外加散热方式时,40 度条件下连续工作不超过 **Po**=u*i,70 度条件下连续工作不超过 50%*Po, 40 度条件下每增加一度，减额 1.667%的额定负载。

1,In the presence of external heat dissipation conditions,the continuous output power shall not exceed 504W at 40℃,The output power shall derating 1.667% per degrade at ambitious higher than 40℃.

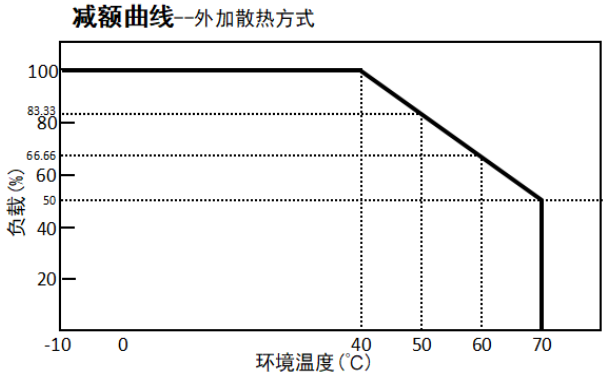

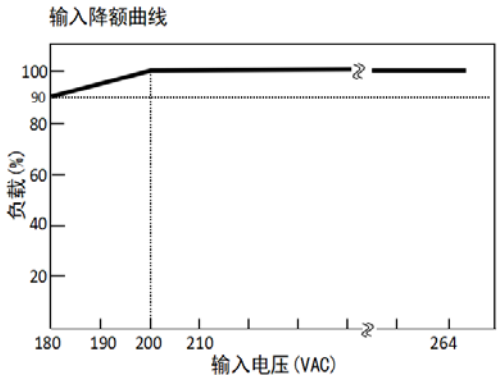

2,当输入电压与环境温度均需降额时，需同时执行 2 种降额曲线，例如当输入电压 180VAC，环境温度 70℃时，在有外加散热时,输出最大功率为 90%*50%*Po。

When both input voltage and ambient temperature require derating,two derating curves need to be executed simultaneously,Such as,When the input voltage is 180VAC and the ambient temperature is 70℃ In the presence of external heat dissipation conditions the maximum output power is 90%*50%*Po. In the absence of external heat dissipation conditions,the maximum output power is 90%*28%*Po.

Note(4) 纹波和噪声测试方法：使用一条 12cm 双绞线，同时终端要并联 0.1uF 陶瓷电容和 10uF 电解电容，在 20MHZ 带宽下进行量测。

Ripple & Noise testing method: A 0.1uF CERAMIC capacitors and 10uF electrolytic capacitors should be put across output terminals during ripple & noise test. The oscilloscope bandwidth is set at 20 MHz and a 12cm twisted-pair will be used to measure it.

3. 保护功能 PROTECTION

3.1 输出过流保护 Output Over Current Protection

当输出电压+24.0V，输出电流达到 25.0-33.5A，电源将进入打嗝保护状态,当故障排除后，电源会自动恢复工工作。

When the output current of output power +24.0 V is up to 25.0-33.5A, power will enter hiccup protection status, and it will recover when the breakdown's removed.

3.2 短路保护 Short Circuit Protection

当输出端短路时电源不能被损坏、不能起火燃烧，短路消除后能自动恢复。

When output is short, the power supply don't be damaged,don't burst into flames and it will recover when such condition's removed.

3.3 过压保护 Over Voltage Protection

测试项 **Sense Level**	过压值 **Over Voltage**	保护模式 **Protection Mode**
Over Voltage Protection (when Normal Output)	35V Max	自恢复保护 Self-Recovery Protection

电源在输出过压时保护，去掉故障后自恢复。

The power supply should protect itself when the output achieve over voltage, and it will recover when the breakdown's removed.

3.4 输入欠压保护 Input Under Voltage Protection

交流输入欠压保护点：开机电压<160Vac ；关机电压<150Vac。

The power supply should protect itself when the input brown in (<160Vac) and brown ouit(<150Vac).

3.5 过温保护 Over Temperature Protection

电源支持过温保护，自恢复，过温保护点确保所有器件温度规格不超标。

The power supply should protect itself when OTP occur, and it will recover when the breakdown's removed. The OTP points ensure all device temperature specifications.

4. 安规要求 SAFETY REQUIREMENTS AND CERTIFY

该系列电源设计符合下列安全规格：

1 满足 GB4943 标准要求。

(1)Safety standardization :GB4943.

项目 Item	等级 Grade	标准 Standard(或测试条件 Test Conditions)
输入对输出 Input to output	3000Vac/50Hz	持续 1 分钟,无击穿,无飞弧现象,漏电流<10mA。（测试时断开放电管） One minute,no breakdown,no flight arc,Leak current<10mA.(open the discharge tube during tests)
输入对地 Input to earth	2000Vac/50Hz	持续 1 分钟,无击穿,无飞弧现象,漏电流<10mA。（测试时断开放电管） One minute,no breakdown,no flight arc,Leak current<10mA.(open the discharge tube during tests)

输出对地 **Output to earth**	500Vac/50Hz	持续 1 分钟，无击穿，无飞弧现象，漏电流<10mA。（测试时断开放电管） One minute,no breakdown,no flight arc,Leak current<10mA.(open the discharge tube during tests)
绝缘电阻 **Insulating resistance**	10MΩ	常温常压下，相对湿度为 90%，试验电压为直流 500V 时，整流器主电路的交流部分和直流部分对地，以及交流部分对直流部分的绝缘电阻均不低于 10MΩ.（测试时断开放电管） Measure voltage 500VDC(open the discharge tube during tests)
漏电流 **Leak current**	≦3.5mA	输入 264Vac60Hz Input 264Vac/60Hz

2：结构安全标准符合 GB4943 ；Mechanical Safety refer to GB4943；
3：IP 防护等级 IPX0；Degrees of protection provided by closure IPX0；
4：工作海拔要求 5000m；Operating to 5000 meters；
5: 工作环境污染等级定义；Pollution II；

5. 电磁兼容性 EMC

项目 Item	指标要求 Index requirements	标准 Standard
传导干扰(CE)	N/A	EN55032 Class B
辐射干扰(RE)	N/A	EN55032 Class B
静电抗扰(ESD)	空气放电 Air±8KV Level3	IEC61000-4-2 Category B
	接触放电 Indirect Contact±6KV Level 3	IEC61000-4-2 Category B
快速瞬间变脉冲群(EFT/B)	4KV(Level 4) / 2KV (level 3)(power line)	IEC61000-4-4 Category B
浪涌 (SURGE)	交流输入端口时， 线对线 L-N:±2kV, 线对地 L&N-PE:±4kV， 8/20(1.2/50)us 波	IEC61000-4-5 Category B
CS	0.1...80MHz (1KHz AM 80%) 10V Level 3-Asymmetrical,	IEC61000-4-6 Category A
RS	80...3000MHz (1KHz AM 80%) 10V/m Level 3 criteria A	EN 61000-4-6 criteria A
Magnetic Field Immunity	50Hz and 60Hz: 10A/m : criteria A 30A/m : criteria B	IEC61000-4-8
电压跌落和短时中断（DIP）	0% during 0,5 and 1 period 40% during 10/12 fluctuations 70% during 25/30 fluctuations 80% during 250/300 fluctuations	EN 61000-4-11 criteria B
谐波电流	满足 Class A 类产品的限制要求	IEC6100-3-2
电压波动和闪烁	0% during 250/300 fluctuation	IEC6100-3-3 criteria B

性能判据 A（连续现象）

在干扰过程中，直流输出范围应与 在正常服务条件一致：DC 输出电压的波动应在±10%内；

干扰过程中或结束后，被测设备运行时不应有告警，错误告警指示（电源故障、保护故障等）和错误显示。

性能判据 B（瞬变现象）

a）在试验过程中，直流输出端的电压不应超出最大值；

b）在干扰过程中出现的波峰群应忽视；

c）干扰结束后，被测设备运行时不应有告警，错误告警指示（电源故障、保护故障等）和错误显示；

d）在干扰结束后，应自动恢复到正常性能。

性能判据 C（中断）

功能的暂时丧失是允许的，所规定的功能是可自动恢复的或能被操作者恢复，或被正常的后来的运行恢复。

性能判据 D（抵抗性）

设备应承受测试没有损坏或其它干扰（如软件损坏或故障保护设备的误操作），而且在瞬变电磁现象结束后适当地在规定界限内运行。（不必要求当测试进行时适当运行）。干扰可以造成保险丝或其它规定设备的动作，而不得不在正常运行恢复前替换或复位。

Performance Criteria Description :

A－－normal performance within limits specified by the manufacturer, requestor or purchaser.

B－－temporary loss of function or degradation of performance which ceases after the disturbance Ceases, and from which the equipment under test recovers its normal performance, without operator Intervention.

C－－temporary loss of function or degradation of performance, the correction of which requires Operator intervention.

D－－loss of function or degradation of performance which is not recoverable, owing to damage to Hardware or software, or loss of data.

6. 环境适应性 ENVIRONMENT ADAPTABILITY

6.1 环境条件 Environment Condition

项目 Item	最小值 Min	典型值 Normal	最大值 Max	单位 Units	备注 Note
工作温度 Operation Temperature	-10	25	70	℃	-10℃冷态可启机，配合系统满足正常工作要求。 It can turn on at -10℃
储存温度 Storage Temperature	-20	25	85	℃	--
工作湿度 Operation Humidity	10	--	90	%	无冷疑 no condensation
储存湿度 Storage Humidity	5	--	95	%	无冷疑 no condensation
大气压力 Atmospheric Pressure	86	--	106	KPa	
散热方式 Emitting Heat Mode	① 强制风冷系统提供最小 15 个 CFM ，风扇距离电源 5cm Note(5) Forced air cooling system need the Fan provide 15 CFM Min,and the Fan should be 5cm away from the power。				
	② 外加铝板底板散热，铝板最小尺寸 450(长)*450(宽)*3(厚) 单位：mm Note(6)				

	When using external aluminum plate for heat dissipation，the minimum size is not exceeding 450(L)*450(W)*3(T) unit:mm

备注：此电源需外加风扇散热或铝底板散热,至少使用一种散热方式。

Remark:The Power need work with fan or aluminum plate to cooling.and at least one cooling mode.

Note(5) 所使用风扇最小风量 15CFM，尺寸以及摆放方式见下图。风扇参考规格:12Vdc 0.13A。

Forced air cooling system need the Fan provide 15 CFM Min，and the suggested fan size and Fan assembly mode refer to the flowing figure。The Fan specification for reference:12Vdc 0.13A。

Note(6) 当铝板散热时,铝板表面必须光滑,与电源机壳底部接触区域**需涂散热油**便于优化散热，电源必须用螺丝紧紧安装在铝板中心位置。

When cooling used the aluminum plate,the surface of it must be smooth,the contact area with the bottom of the power supply housing should be coated with cooling oil to facilitate the optimization of heat dissipation,The power must be firmly installed in the center of the aluminum plate with screws.

风扇尺寸 Fan Size

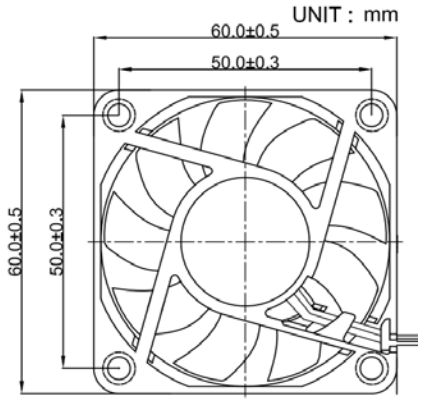

风扇装配方式 Fan assembly mode

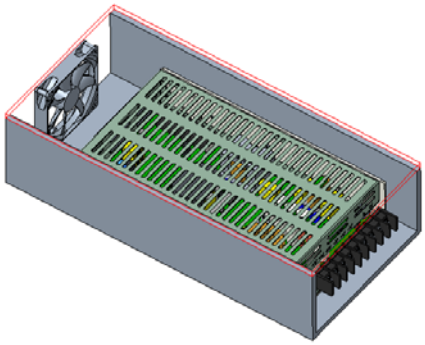

铝底板组装方式 Aluminum plate assembly drawing

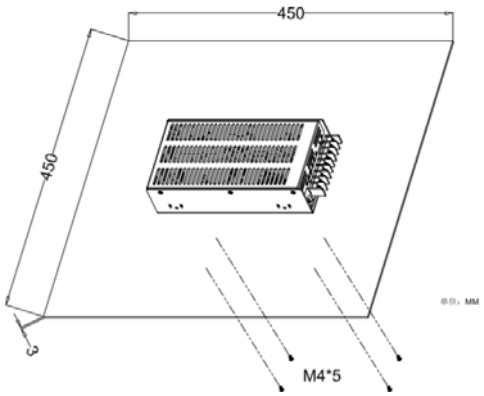

6.2 电源寿命测试 Life Test

6.2.1 ECAP Life≧26280H(3 years)

电源环境温度 40℃及额定输入与 80%载条件下，电容寿命至少 26280H(3 years)。

The power life time shall be at least 30000Hours,when the ambient temperature is 40℃ at 80% load.

6.2.2 MTBF>500000h

电源环境温度 25℃及额定输入与满载条件下，按照 IEC 61709(SN 29500)标准，MTBF 大于 500000Hours

The MTBF shall be at least 500000Hours when the ambient temperature is 25℃ at full load.

>500000h acc. IEC 61709(SN29500) at 25 Degree

6.3 老化要求 Aging Requirement

电源老化时间参考电源企业内部产品老化时间升降流程作业。

老化条件：额定电压 230Vac 输入，70%载，40-/+5℃.

The Aging time refers to manufactory criterion.

Aging condition; 230Vac，70% load 40-/+5℃.

6.4 震动 Vibration

10～500HZ,5G 10 分钟/周期，X、Y、Z 轴各 60 分钟。(单台机子)

Between 10HZ and 500HZ,5G 10 minutes per cycle, 60 minutes at per X、Y、Z directions.(1 set)

6.5 冲击 Shock

加速度 30g,每个方向各 6 次，X、Y、Z 轴，(单台机子)

Shock acceleration 30g, and 6 times per X、Y、Z direction. (1 set)

7. 电源结构规格 POWRE MECHANICAL SPECFICATION

7.1 电源外观尺寸 Mechanical outline

外壳尺寸 L*W*H=215mm *115mm *50mm，

Ensure size L*W*H=215mm *115mm *50mm

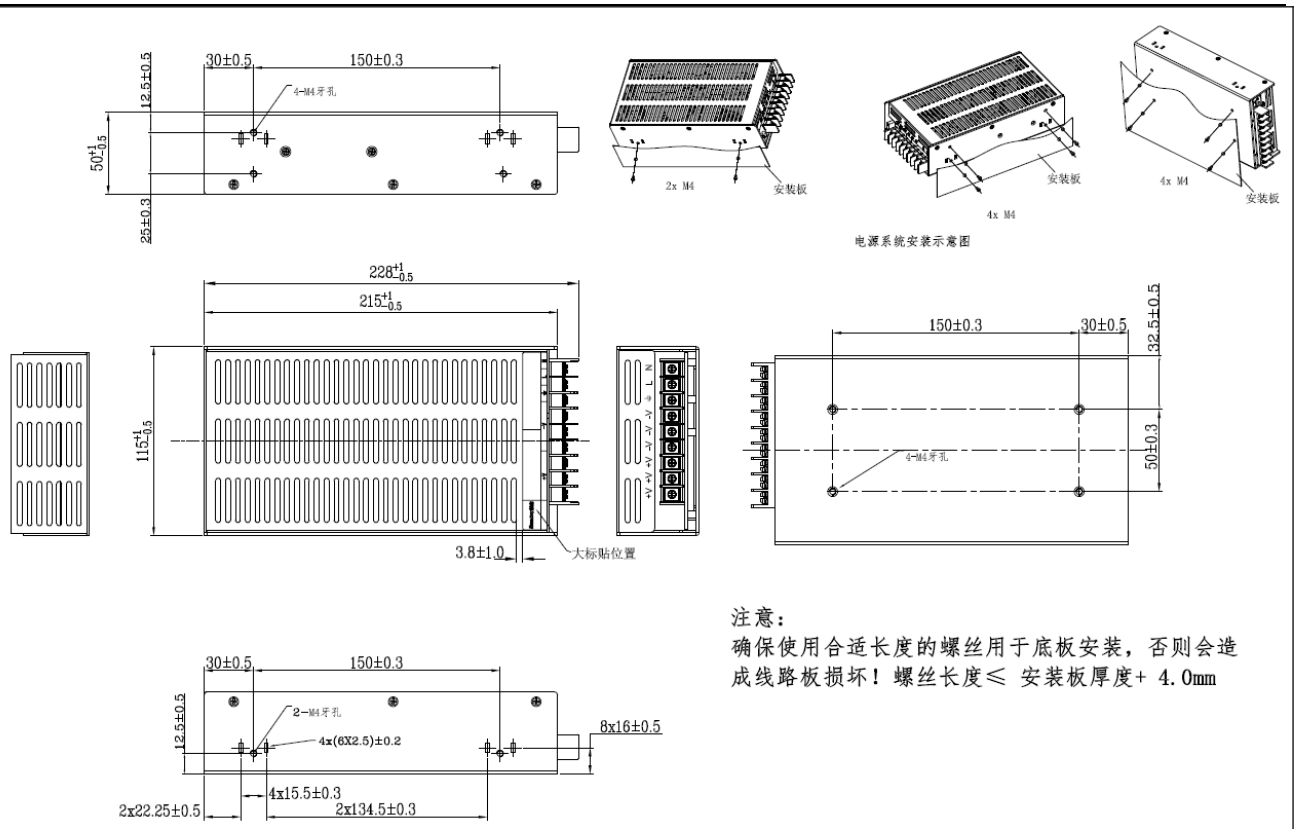

注意：
确保使用合适长度的螺丝用于底板安装，否则会造成线路板损坏！螺丝长度≤ 安装板厚度+ 4.0mm

7.2 安装尺寸 Mounting Size

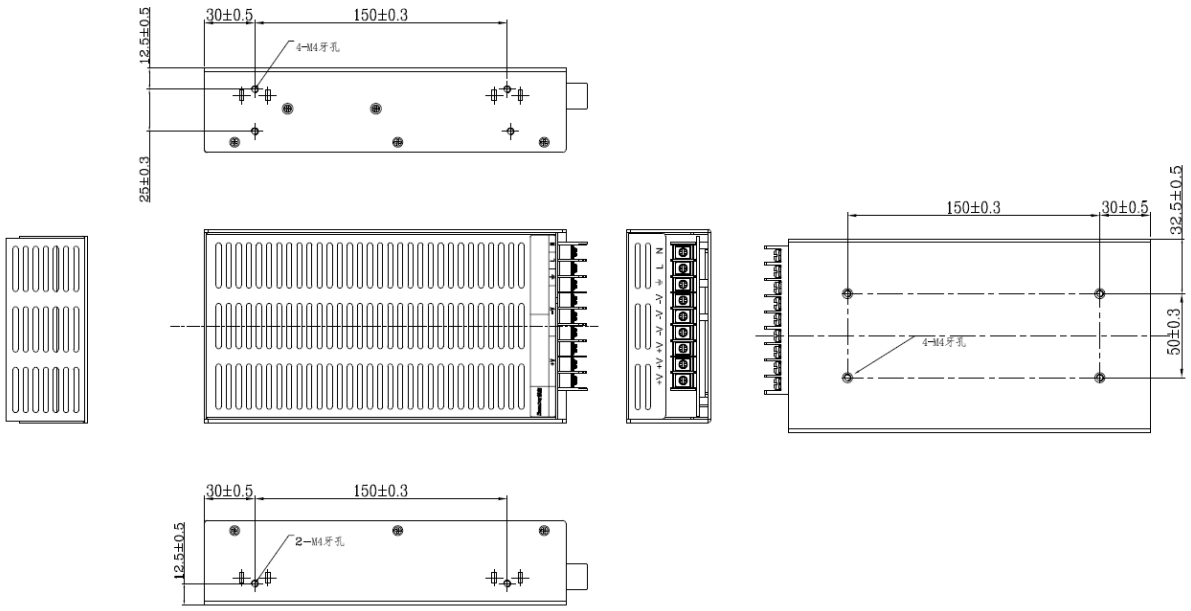

注意：客户安装时的螺钉规格为：M4，长度为 4mm;

Note:the screw specifications for customer installation are:M4,length is 4mm.

7.3 AC、DC 输入/输出端子

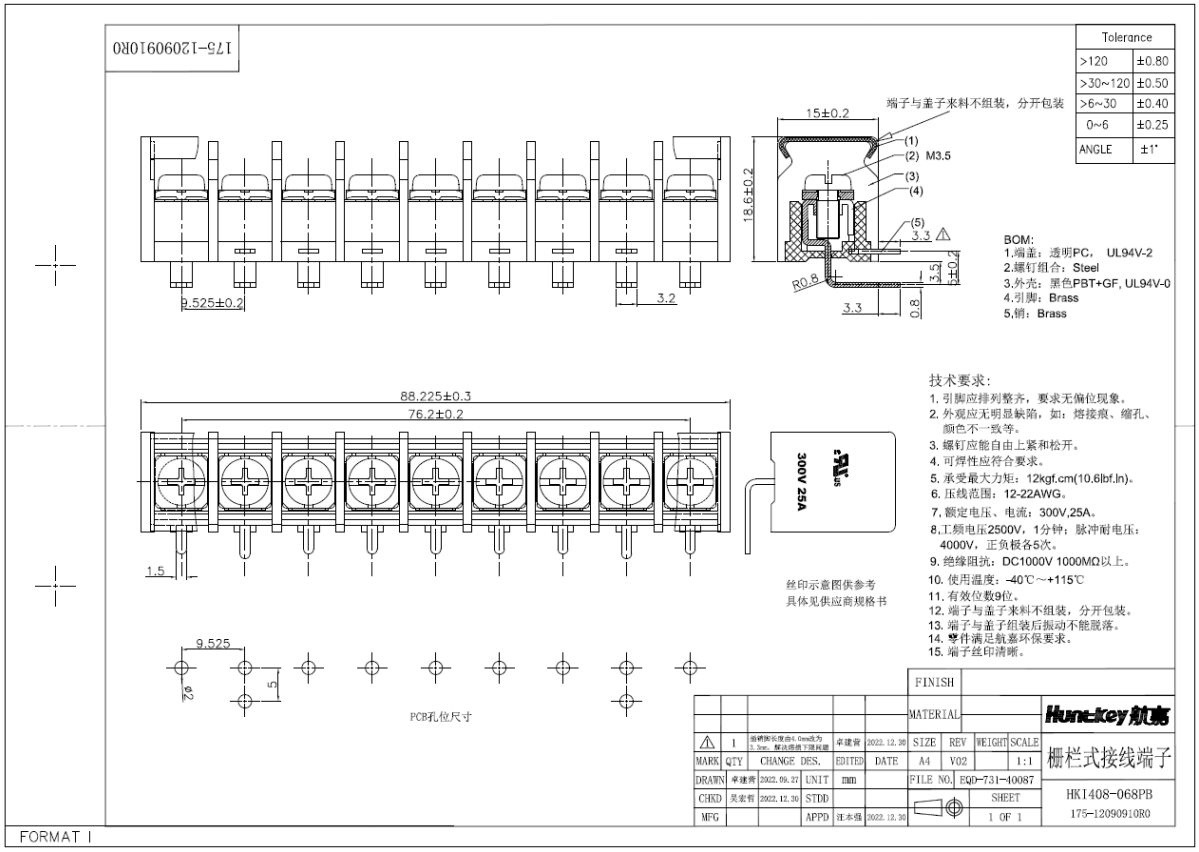

8. 包装 PACAGING

8.1 包装图 **Packaging Size.**

0.88Kg/1 set；12pcs/约 10.56Kg

单机用气泡袋包装,然后放入瓦楞纸箱并用纸板隔离。纸箱内尺寸 L447*W313*H262mm.

One set packed by a bubble pack, Then take the unit into carton and isolated by chipboard by chipboard.Carton inner dimension L447*W313*H262mm.

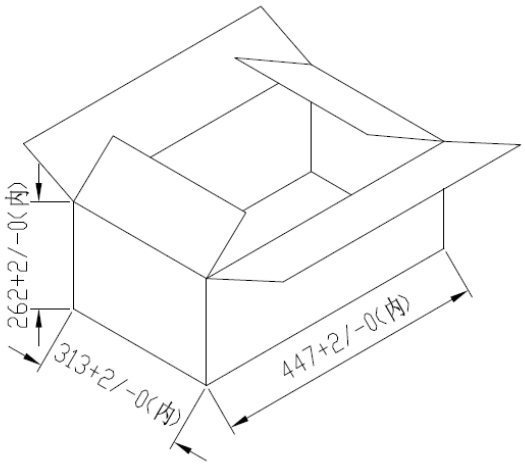

8.2 产品标签图 Label Drawing(for reference)

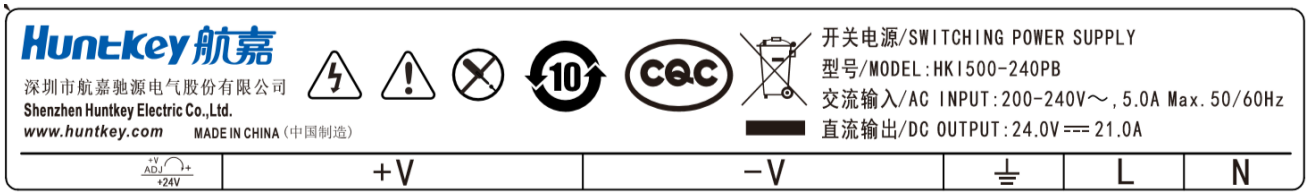

8.3 运输 Transports

包装储运图示标志有：向上、小心轻放、怕湿、堆码极限等标志（标志应清楚、整齐、耐久）。

Upwards,Handle with care,Isolated to water, Take care to put symbol in the carton .(The label should be clear,tidy,durable ）

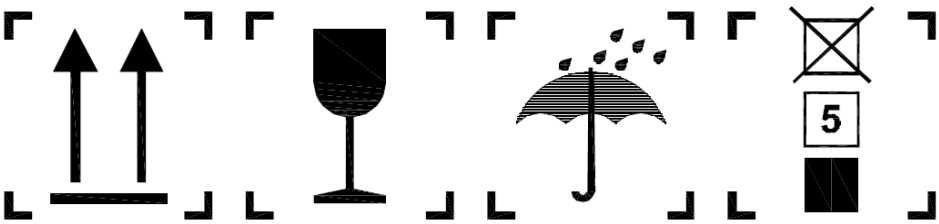

9. 样机图片 Sample Figures

		File No.：
		Version：V04
Prepare by:	Check by:	Approved by:
Liu Dengjun	Wang Guixu	Wang Benqiang
Date:	2023-06-28	